DewEze CLUTCH PUMP KIT

711400	Bracket Assy. (Inc. items 1, 2, 3)		Kit No.	700392	
711356	Bracket Bolt Pkg. (Inc. items 6, 8)		Make	Chevrolet/GMC	
None	Pulley Bolt Pkg.		Engine	8.1L	
None	Idler Bolt Pkg.		Fuel	Gas	
None	Fan Spacer Bolt Pkg.		Year	2001	
			Equipment	2 Engine belts, H.D. Alt.	
			Revised	C	3-8-05

ITEM	PART #	DESCRIPTION
1.	711399	Engine bracket
2.	-----	-----
3.	710936	Pump plate
4.	*	Pump
5.	742016	Clutch
6.	540039	3/8-16 x 1 1/4 Socket head bolt
7.	-----	-----
8.	110217	M10 x 70 x 1.5 Bolt
9.	OEM	Bolt
10.	OEM	Bolt
11.	510113	3/8-16 x 1 1/4 Bolt
12.	510365	3/8 Flat washer
13.	700240	Radiator hose
14.	OEM	Thermostat housing
15.	742026	Belt/K061080

* See master list for pump part no.

FIG. 1

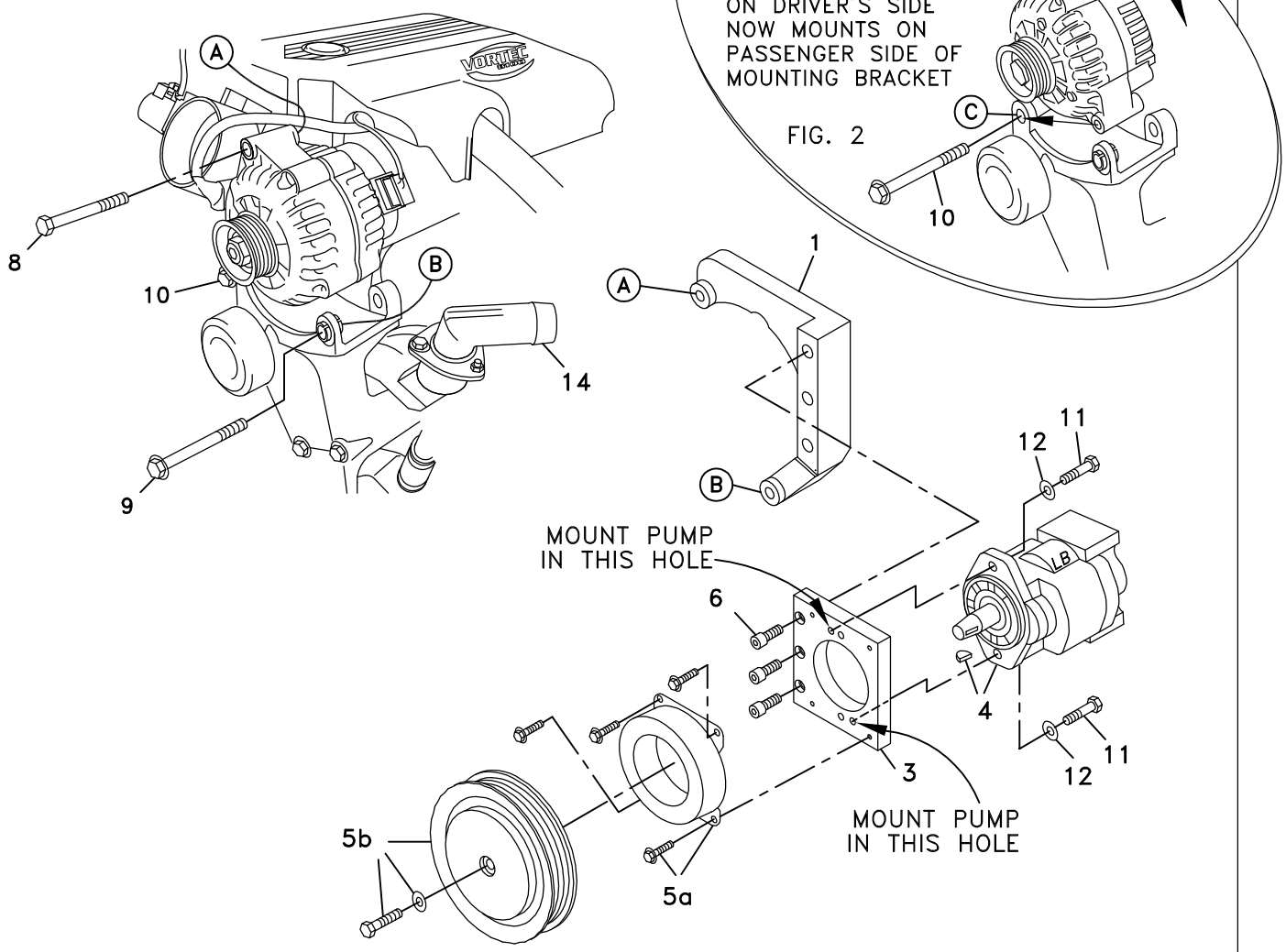

Ⓐ,Ⓑ,Ⓒ... Denotes bolt holes in engine to locate corresponding holes in Pump Brkt.

© DewEze Manufacturing 2001

FIG. 3

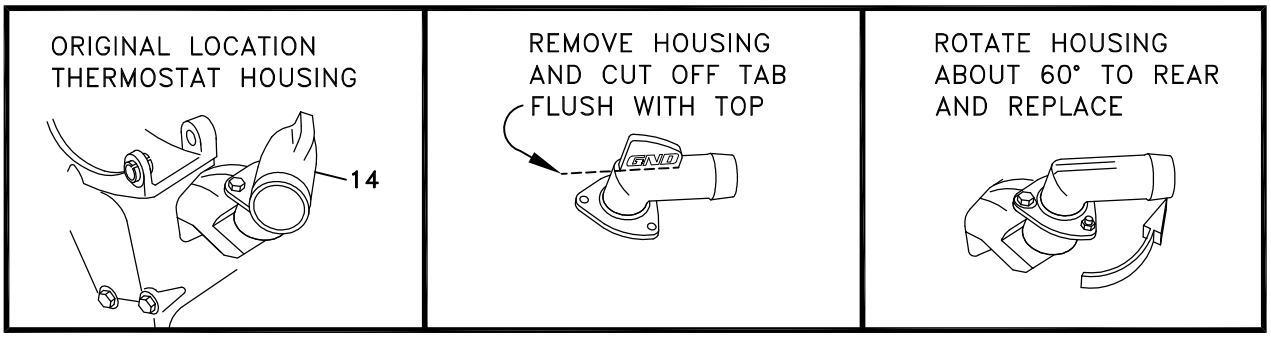

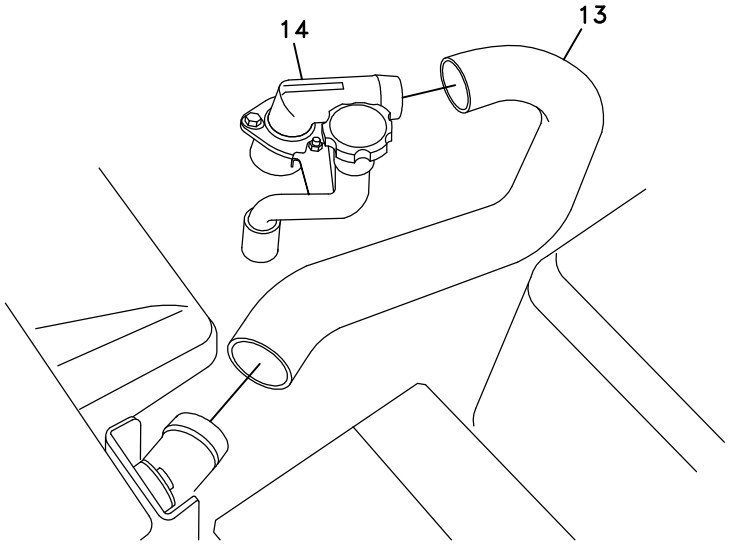

BELT DIAGRAM

FIG. 4

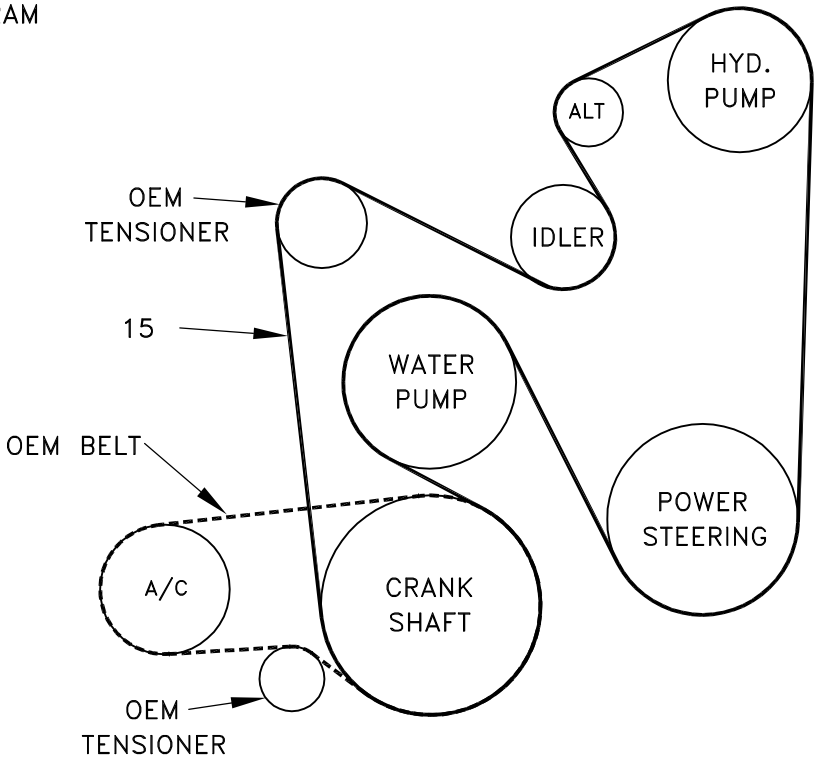

Clutch Pump Kit

#700392

Chevy 8.1L
with A/C
2 – Belt
H.D. Alt.
'A' mount
2001-

DewEze

INSTALLATION INSTRUCTIONS

1. Disconnect the battery.

2. Refer to Fig. 3 for items 2 and 3. Drain enough coolant from the radiator to get it below the upper hose. Remove the OEM upper radiator hose. The hose will be replaced. Save the clamps to use again. Unthread the nut holding the power steering fill tube to the thermostat housing. Unthread the remaining bolts mounting the housing. Remove the thermostat housing. Cut off the GND lug flush with the top of the housing.

3. To replace the thermostat housing, rotate it about 60° CCW to the rear from its original location and mount it with the OEM bolts. Place the power steering fill tube in its original location and fasten it with the OEM nut. Place the DewEze hose in position using the OEM hose clamps. Replace the coolant.

4. Unbolt the alternator. Rotate it clockwise so the alternator lug that was on the driver's side of the mounting bracket is now on the passenger side of the mounting bracket. See Fig. 2. Thread the OEM bolt (10) that was originally in that hole back into the same location to mount the alternator. Do not tighten it yet.

5. Attach the pump plate (3) to the engine bracket (1) with three 3/8 x 1 1/4 socket head bolts (6).

6. Bolt pump (4) onto pump plate (3) with two 3/8 x 1 1/4 bolts (11) and two 3/8 flat washers (12). Torque to 20 ft-lb. Attach coil (5a) with four 1/4 x 1/2 flange bolts supplied with clutch. Torque these to 6 ft-lb. Attach clutch pulley (5b) to pump shaft with 5/16NF x 1 1/4 bolt and heavy washer supplied with clutch. Torque to 14 ft-lb.

7. Insert the lower bracket between the lugs on the alternator bracket at location B with the OEM bolt (9) taken from this location. Insert the M10 x 70 bolt (8) into the top hole in the alternator and thread into the DewEze bracket at location A. Tighten these bolts and the OEM bolt at location C.

8. Install the belt (15).

9. Connect the battery.

10. Run the engine and check for any clearance or alignment problems. Adjust as needed.